DATE REVISED	DATE FILMED	DATE REVISED	DATE FILMED	FED.ROAD DIST.NO.	STATE	FED. AID PROJ. NO.	SHEET NO.	TOTAL SHEETS
				6	ARK.			
				JOB NO.		030195	99	142
				(1)	06861 - LAYOUT - 42675			

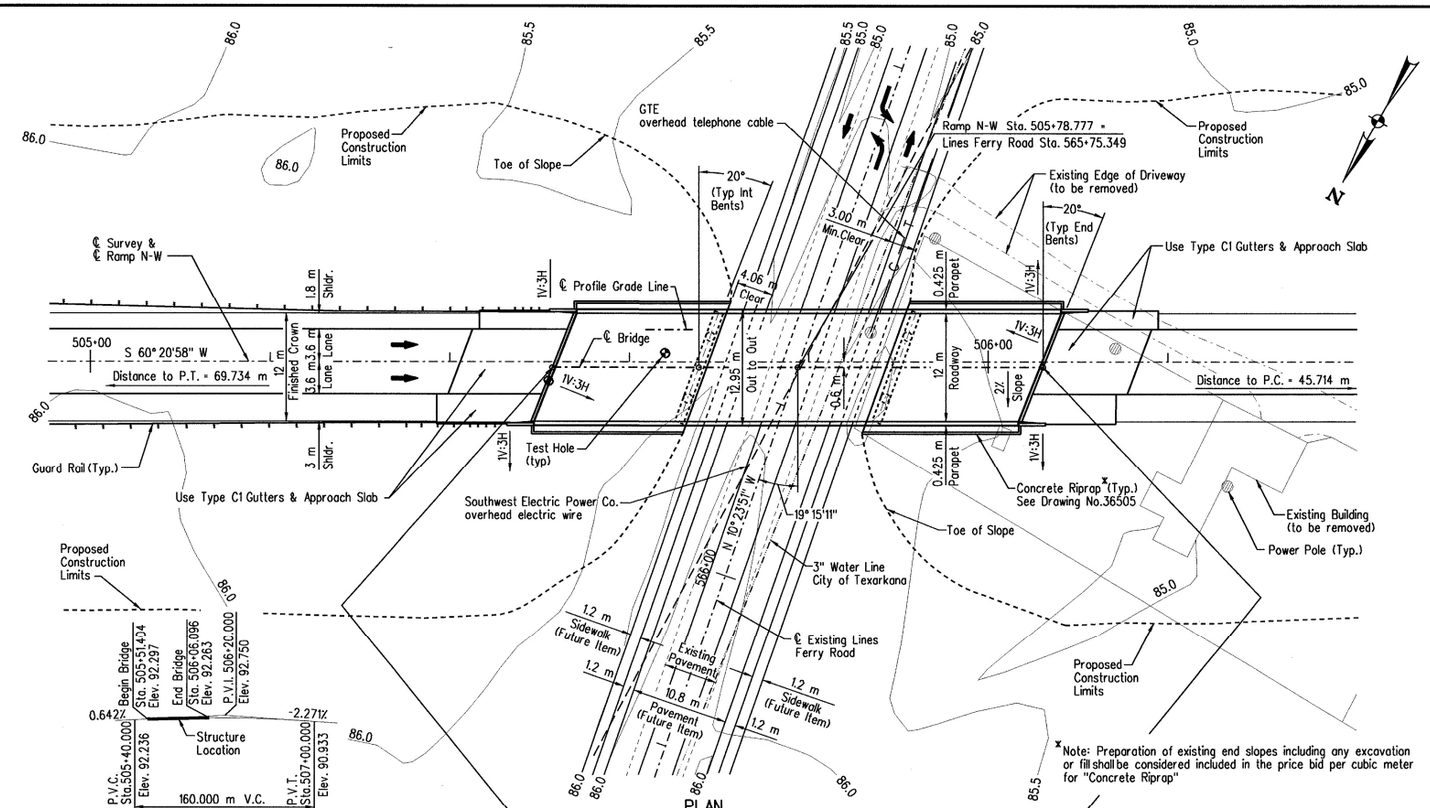

PLAN

Note: For R/W Data See Roadway Drawings

PROFILE GRADE

Note: All elevations in detail above are shown at profile grade line.

Note: Stationing is along the ℄ Survey. ℄ Bridge is 0.6 m right of ℄ Survey. Elevations are shown at ℄ Bridge, unless noted otherwise.

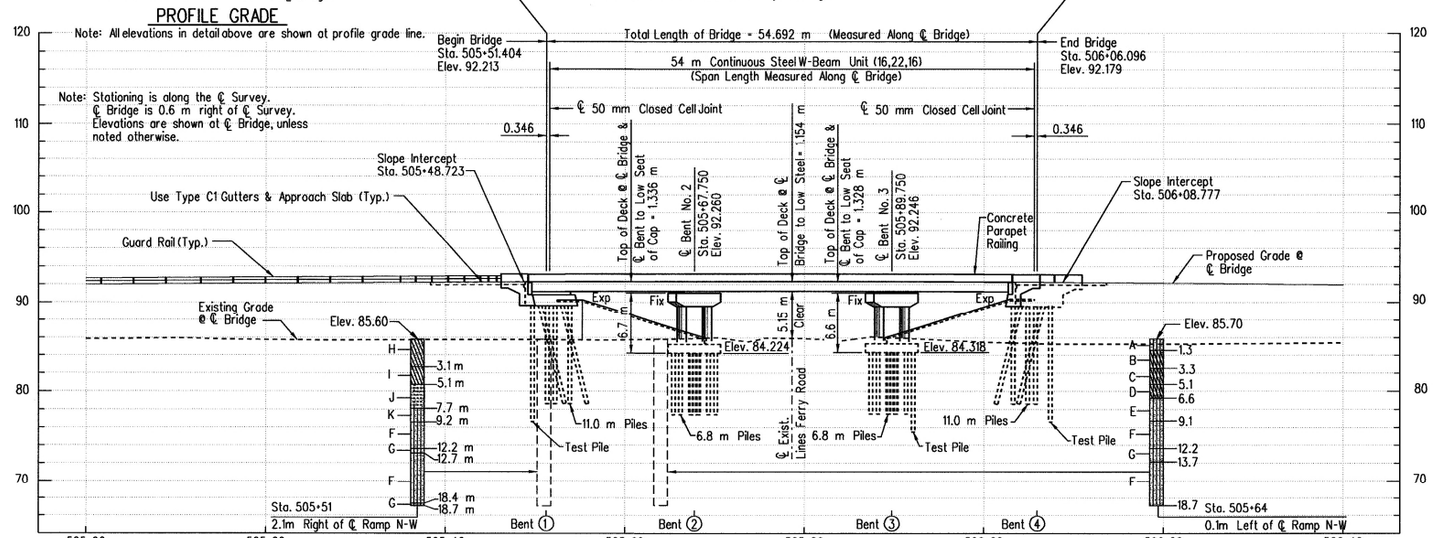

ELEVATION

GENERAL NOTES:

All dimensions are in meters unless otherwise noted.

BENCH MARK: *155 PK nail and shiner on east side of Lines Ferry Road 250 m south of Rocky Creek. 343 m right of ℄ Survey State Highway 245 Sta. 115+83, Elev. 84.62.

CONSTRUCTION SPECIFICATIONS: Arkansas State Highway and Transportation Department Standard Specifications for Highway Construction (1996 edition) with applicable supplemental specifications and special provisions. Unless otherwise noted in the plans, section and subsection refer to the Standard Construction Specifications.

DESIGN SPECIFICATIONS: AASHTO Standard Specifications for Highway Bridges (1996 edition) with current interim specifications.

LIVE LOADING: MS 18 and Alternate Military Load METHOD OF DESIGN: Load Factor
SEISMIC PERFORMANCE CATEGORY: A

MATERIALS AND STRENGTHS:

Class S(AE) Concrete (superstructure)	f'c=28.0 MPa
Class S Concrete (substructure)	f'c=24.0 MPa
Reinforcing Steel (ASTM A 615/A 615M-96a)	fy=420 MPa
Structural Steel (AASHTO M 270, Gr. 345W)	Fy=345 MPa
Structural Steel (AASHTO M 270, Gr. 250)	Fy=250 MPa

BORING LOGS: Boring logs may be obtained from the Programs and Contracts Division.

CONCRETE PILING: Piling for Bents 1 and 4 shall be 355 mm square precast concrete and shall be driven to a minimum safe bearing capacity of 390 kN per pile. Piling in Bents 2 and 3 shall be 405 mm square precast concrete and shall be driven to a minimum safe bearing capacity of 490 kN per pile. All piling shall be driven with an approved air, steam, or diesel hammer. Piling in end bents shall be driven after embankment to bottom of cap is in place. Piling in Bents 1 and 4 shall have a minimum penetration of 6.0 meters below natural ground. Piling in Bents 2 and 3 shall have a minimum penetration of 3.0 meters below the bottom of footing. Lengths of piling shown are assumed for estimating quantities only. Actual lengths to be determined in the field. Drive one 13.7 m test pile in Bent 1 & 4 and one 9.1 m test pile in Bent 3.

PREBORING: Preboring may be required to obtain minimum penetration requirements. The Engineer determimes the required length of preboring after test piles are driven. Preboring will not be paid for directly, but will considered subsidiary to the item "Concrete Piling (Section 805)".

BRIDGE DECK: The concrete bridge deck shall be given a tine finish as specified for final finishing in Subsection 802.19 for Class S Tined Bridge Roadway Surface Finish.

DETAIL DRAWINGS:

	DRAWING NO.
End Bents	42676 - 42679
Intermediate Bents	42680 & 42681
W-Beam Unit	42682 - 42687
Elastomeric Bearings	42688
Detail of Standard Concrete Piling	36506

BORING BLOW COUNTS

Sta.505+51	Sta.505+64
1.4-1.7m, N=12	1.4-1.7m, N=19
3.2-3.5m, N=14	3.0-3.3m, N=17
4.8-5.1m, N=16	4.8-5.1m, N=15
6.3-6.6m, N=32	6.3-6.6m, N=26
7.8-8.1m, N=50	7.8-8.1m, N=41
9.3-9.6m, N=56	9.3-9.6m, N=56
10.9-11.2m, N=55	10.9-11.2m, N=74
12.4-12.7m, N=75	12.3-12.6m, N=(108/120)
13.9-14.2m, N=90	13.9-14.2m, N=87
15.4-15.7m, N=86	15.4-15.7m, N=(93/120)
16.9-17.2m, N=(91/120)	16.9-17.2m, N=(97/120)
18.4-18.7m, N=(94/120)	18.4-18.7m, N=(95/90)

BORING LEGEND

A - Moist, Medium Dense, Brown Sandy Silt
B - Moist, Very Stiff, Brown and Gray Sandy, Silty Clay
C - Moist, Stiff Brown and Gray Sandy, Silty Clay
D - Moist, Medium Dense, Gray and Brown Silty Sand with Clay Seams
E - Moist, Dense, Gray and Brown Silty Sand
F - Moist, Very Dense, Gray and Brown Silty Sand
G - Moist, Very Dense, Gray and Brown Silty Sand with some Thin Cemented Sand Seams
H - Moist, Stiff, Brown and Gray Sandy Clay with Gravel
I - Moist, Stiff to Very Stiff, Gray and Brown Sandy, Silty Clay
J - Moist, Dense, Gray and Brown Silty Sand with Organic Matter and some Clay Seams
K - Moist, Dense, Gray and Brown Silty Sand with some Clay Seams

STATE OF ARKANSAS REGISTERED PROFESSIONAL ENGINEER No. 8940 MARK ASHER 7/12/01

BRIDGE ENGINEER

LAYOUT OF RAMP N-W BRIDGE OVER LINES FERRY ROAD
HWY. 245 - SOUTH (BS. & SURF.) (F)
MILLER COUNTY
US71
ARKANSAS STATE HIGHWAY COMMISSION

LITTLE ROCK, ARKANSAS

DRAWN BY: WEG DATE: 3/18/99
CHECKED BY: JEA DATE: 3/18/99
DESIGNED BY: MAA DATE: 3/18/99
SCALE: 1:300 METRIC
BRIDGE NO. 06861 DRAWING NO. 42675

Carter-Burgess

DGN=d:\job\us71\project5\drawing\bifbglo1.dgn - ON=-62
PRF=F:\PP\5000BW-N\bifbglo1.prf - ROT=90.000000 - SCALE=0.300000

PLOTTED Fri Jun 29 09:04:56 2001
TBL=F:\PLT-TBL\US71.TBL

DATE REVISED	DATE FILMED	DATE REVISED	DATE FILMED	FED.ROAD DIST.NO.	STATE	FED. AID PROJ. NO.	SHEET NO.	TOTAL SHEETS
				6	ARK.			
				JOB NO.		030195	100	142

(1) 06861 - END BENT DETAILS - 42676

Note: Class 1 Protective Surface Treatment shall be applied to the roadway face and top of the transition rail, and to the top of the backwall.

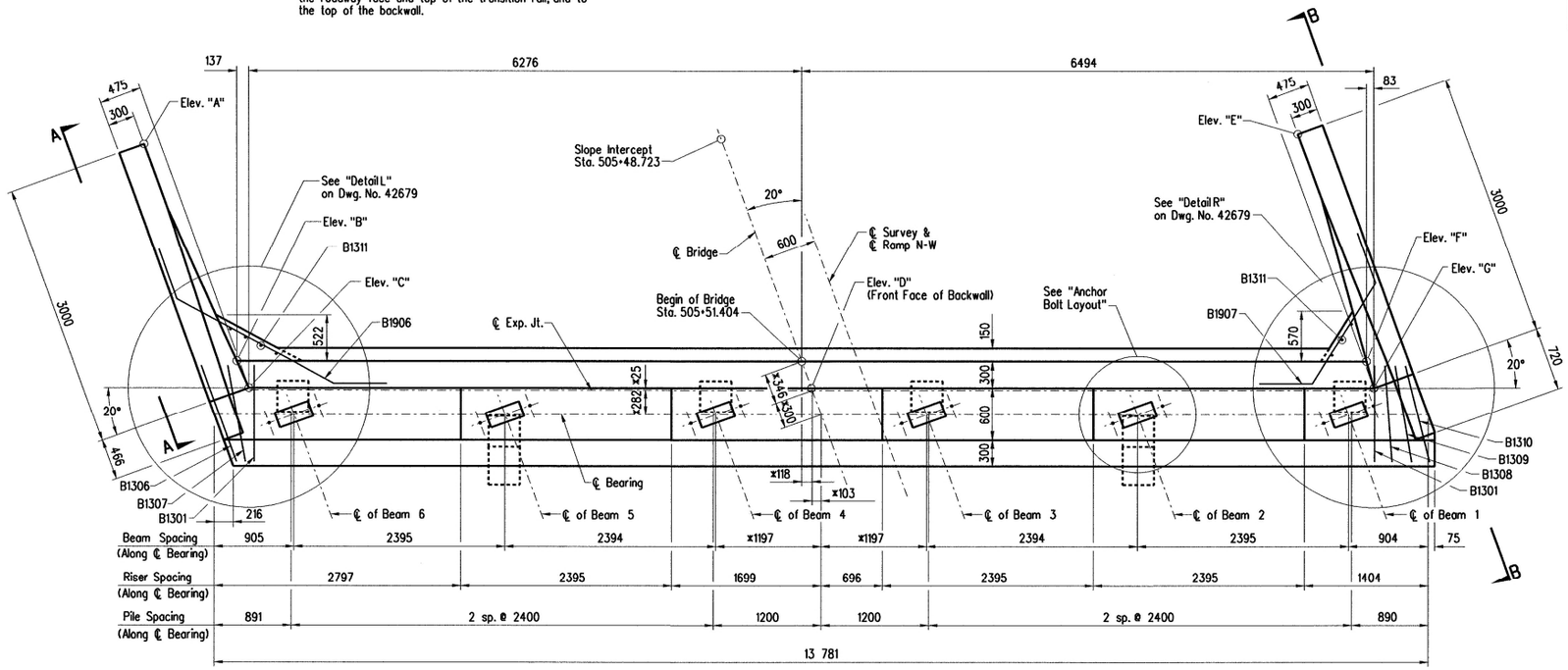

BENT 1 - PLAN

x Dimensions are shown to ℄ Expansion Joint

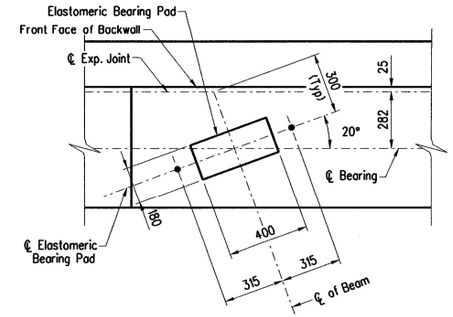

ANCHOR BOLT LAYOUT

(No Scale)

TABLE OF ELEVATIONS

End Bt. No.1	Elevation
Elev. "A"	92.067
Elev. "B"	92.083
Elev. "C"	92.085
Elev. "D"	92.215
Elev. "E"	92.335
Elev. "F"	92.343
Elev. "G"	92.344
Elev. "H"	90.825

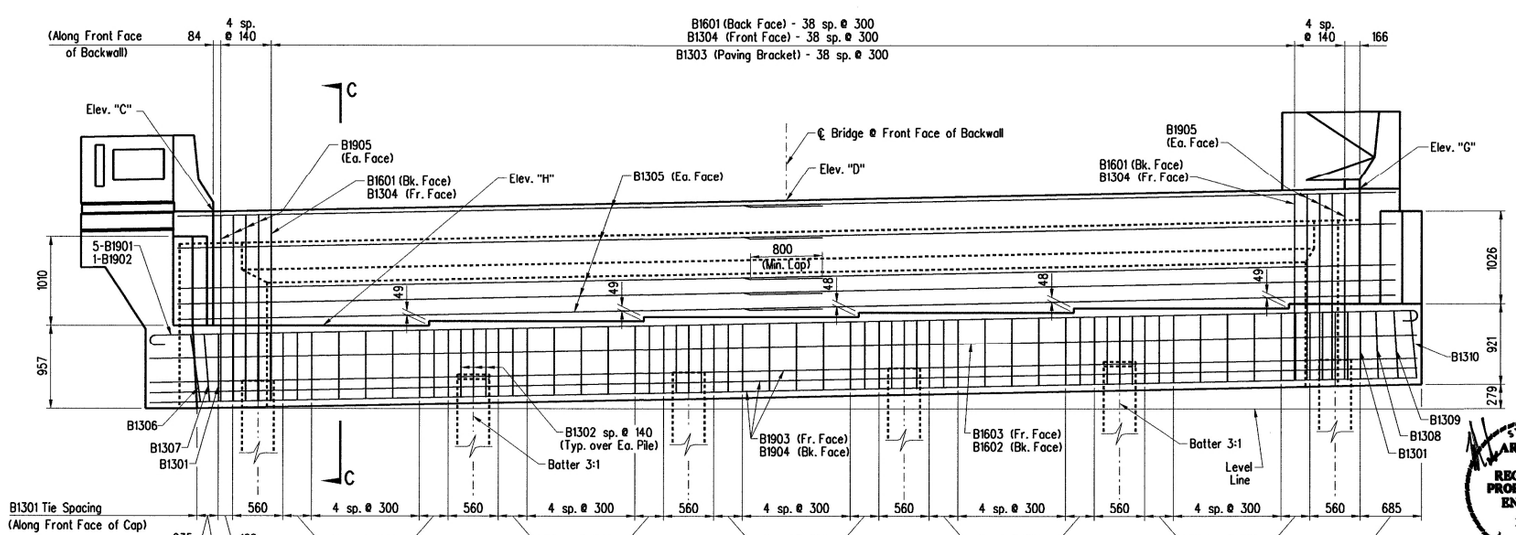

BENT 1 - ELEVATION

(Looking Back)

GENERAL NOTES

All dimensions are in millimeters unless otherwise noted.

Backwall shall not be poured before beams are in place.

Structural steel in end bents shall be AASHTO M 270, Grade 345W and shall be paid for as "Structural Steel in Beam Spans (AASHTO M 270, Grade 345W)".

If anchor bolts are drilled into cap, top reinforcing bars shall be properly placed to avoid damage.

Concrete shall be poured in the dry and all exposed corners shall be chamfered 20 mm unless otherwise noted.

For additional information see layout.

STATE OF ARKANSAS
REGISTERED PROFESSIONAL ENGINEER
No. 8940
MARK ASHER
7/02/01

BRIDGE ENGINEER

SHEET 1 OF 4
END BENT DETAILS
RAMP N-W BRIDGE OVER LINES FERRY ROAD
MILLER COUNTY
US71
ARKANSAS STATE HIGHWAY COMMISSION
LITTLE ROCK, ARKANSAS

DRAWN BY: WEG DATE: 12/29/00
CHECKED BY: MAA DATE: 12/29/00
DESIGNED BY: RLW DATE: 4/4/00
BRIDGE NO. 06861
SCALE: 1:30 METRIC
DRAWING NO. 42676

Carter Burgess

DGN=d:\job\us71\project5\drawing\bifabe01.dgn - ON=1-63
PRF=F:\PP\5000BW-M\bifabe01.prf - ROT=90.00000D - SCALE=0.030000

PLOTTED Fri Jun 29 09:05:07 2001
TBL=F:\PLT-TBL\US71BRDG.TBL

DATE REVISED	DATE FILMED	DATE REVISED	DATE FILMED

FED.ROAD DIST.NO.	STATE	FED. AID PROJ. NO.	SHEET NO.	TOTAL SHEETS
6	ARK.			
JOB NO.		030195	104	142

(1) 06861 - INT. BENT DETAILS - 42680

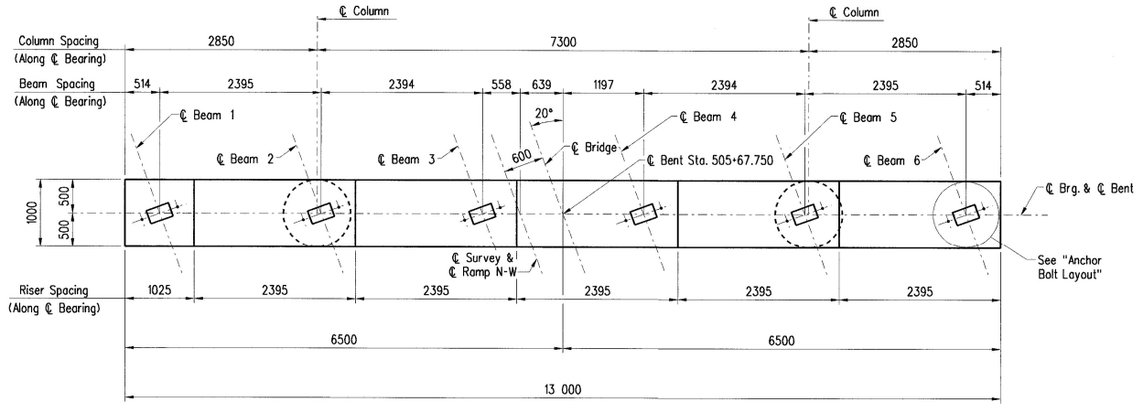

BENT 2 - PLAN

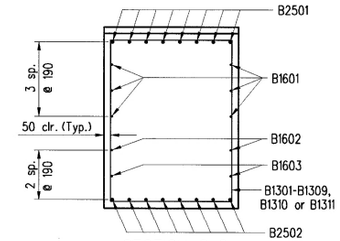

SECTION C-C
(No Scale)

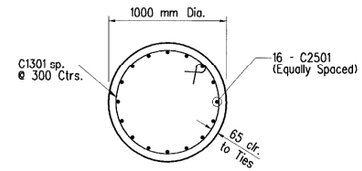

SECTION B-B

BAR LIST

MARK	NO. REQ'D.	LENGTH	A	B	PIN DIA.
B1301 To B1309	2 Ea.	3480 to 4290	785 to 1190	900	50
B1310	23	4310	1200	900	50
B1311	6	3250	1200	900	50
B1601	6	12 900			Str.
B1602	2	12 440			Str.
B1603	2	10 360			Str.
B2501	8	12 900			Str.
B2502	8	12 970			152
C1301	38	3060			76
C2501	32	5450			Str.
F2201	40	3730	3240	180	133
F2202	42	3530	3040	180	133
F2501	32	2190	1900	210	152

BENDING DIAGRAM (DIMENSIONS ARE OUT TO OUT OF BARS)

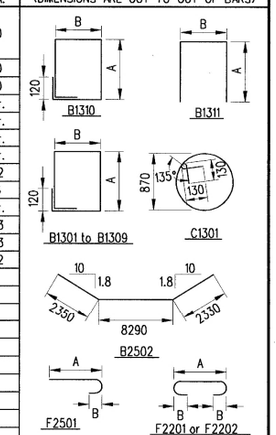

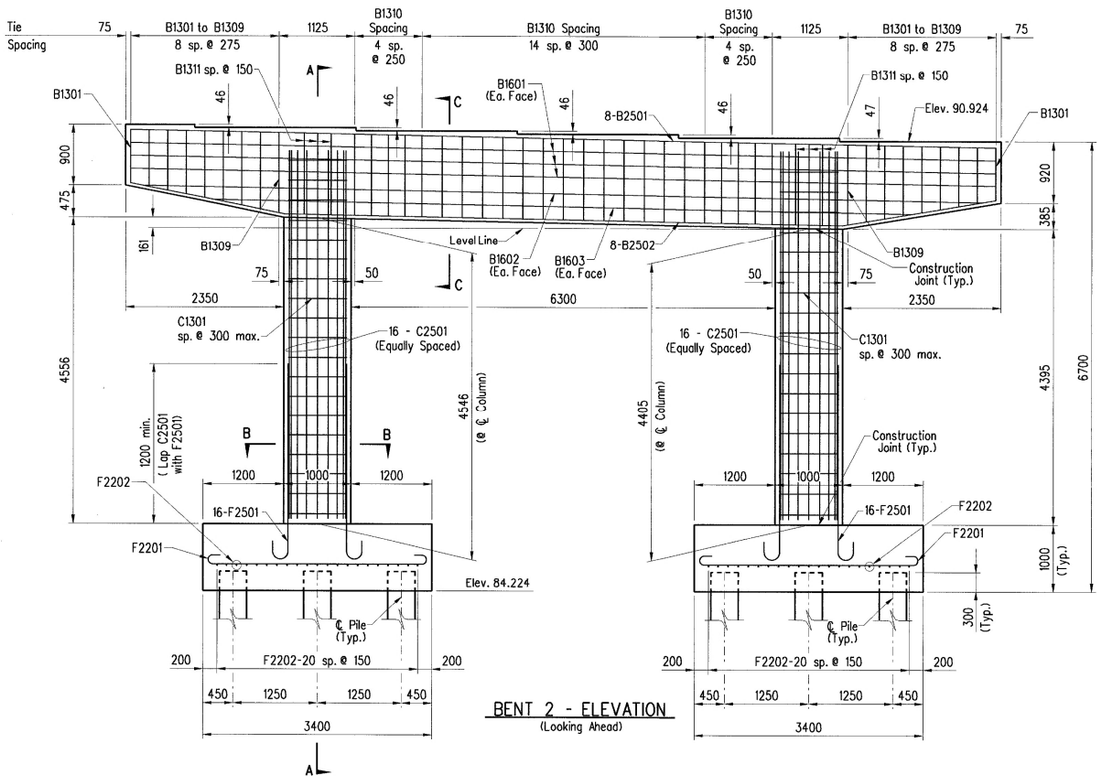

BENT 2 - ELEVATION
(Looking Ahead)

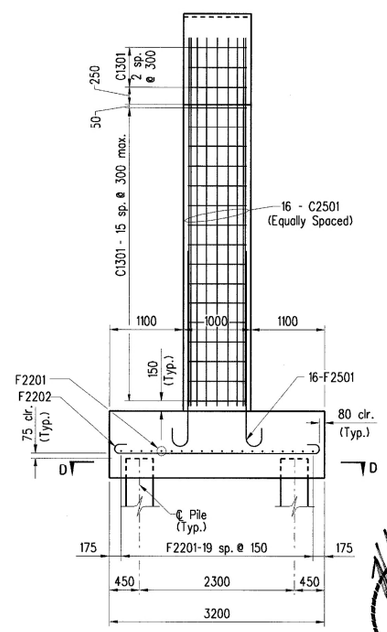

SECTION A-A

GENERAL NOTES

All dimensions are in millimeters unless otherwise noted.

Concrete shall be poured in the dry and all exposed corners shall be chamfered 20 mm unless otherwise noted.

If anchor bolts are drilled into cap, top reinforcing bars shall be properly placed to avoid dmage.

For additional information see layout.

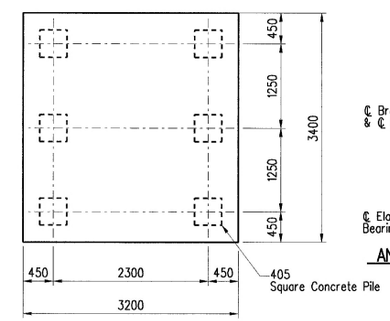

SECTION D-D

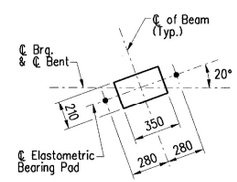

ANCHOR BOLT LAYOUT
(No Scale)

STATE OF ARKANSAS REGISTERED PROFESSIONAL ENGINEER No. 8940 MARK ASHER 6/22/01

BRIDGE ENGINEER

SHEET 1 OF 2
INTERMEDIATE BENT DETAILS
RAMP N-W BRIDGE OVER LINES FERRY
MILLER COUNTY
US71
ARKANSAS STATE HIGHWAY COMMISSION
LITTLE ROCK, ARKANSAS

DRAWN BY: WEG DATE: 12/29/00
CHECKED BY: MAA DATE: 12/29/00
DESIGNED BY: RLW DATE: 3/6/00
BRIDGE NO. 06861 DRAWING NO. 42680
SCALE: 1:40 METRIC

Carter-Burgess

DGN=d:\job\us71\project5\drawing\bfiba02.dgn - ON=1-5,8,20,21,25-27,30,31,39-44,46,47
PRF=F:\PP\755BW-K\bfiba02.prf - ROT=90.000000 - SCALE=0.040000

PLOTTED Wed Jun 20 15:53:56 2001
TBL=F:\PLT-TBL\US71.TBL

DATE REVISED	DATE FILMED	DATE REVISED	DATE FILMED	FED.ROAD DIST.NO.	STATE	FED. AID PROJ. NO.	SHEET NO.	TOTAL SHEETS
				6	ARK.			
				JOB NO.		030195	106	142

(1) 06861 - SPAN DETAILS - 42682

NOTE: The roadway surface and the roadway face and top of parapet rail shall receive a Class 1 Protective Surface Treatment.

NOTE: One #19 epoxy coated bar in the top and one #19 epoxy coated bar in the bottom may be substituted for the S1902E Bar. Payment will be based on the weight of bar S1902E.

* One S1903E shall be placed between each transverse bars in top of slab at open parapets. See Drawing No. 42684

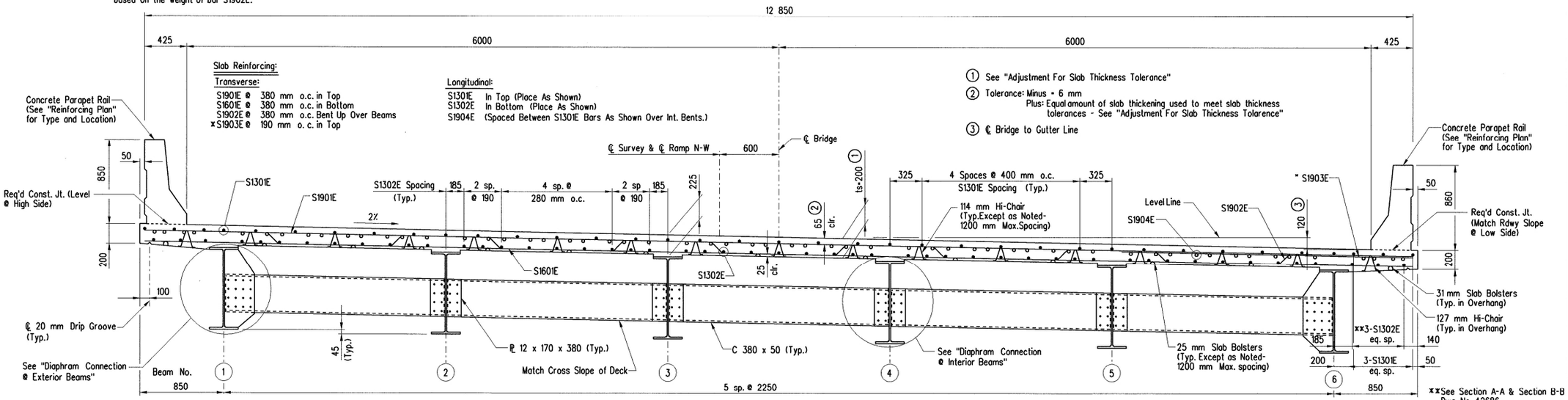

TYPICAL ROADWAY SECTION

(Looking Ahead)

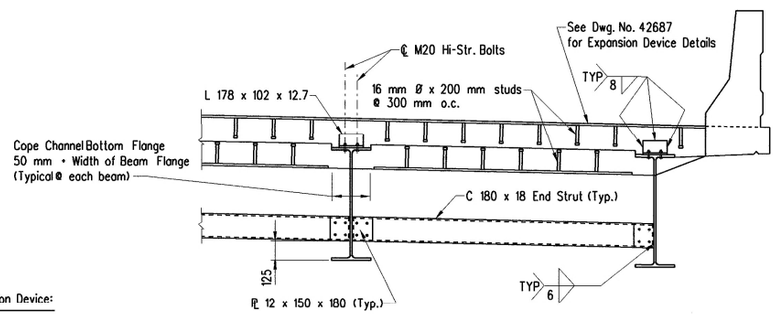

PART ROADWAY SECTION AT END OF UNIT

(No Scale)

Expansion Device:

Roadway Channel C 380 x 50
Conn. L's 178 x 102 x 12.7
16 mm Ø x 200 mm studs @ 300 mm o.c.(top & bottom)
Detail device 4 mm high & provide 8 mm shims using 2-2 mm & 1-4 mm plates. For Details of Bumper ℄ & Seal Support See Dwg. No. 42687

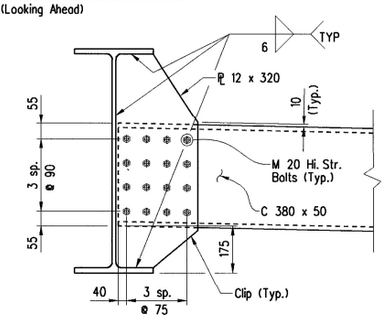

DIAPHRAGM CONNECTION AT EXTERIOR BEAMS

(No Scale)

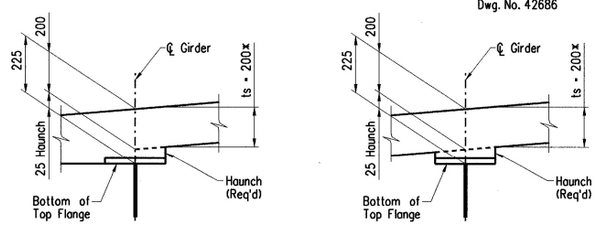

*Tolerance when removable deck forming is used is +12 mm, -6 mm. Haunch forming is required and shall be adjusted to maintain slab thickness tolerance.

Notes:
Haunch dimension may vary within the following limits to maintain the grade and slab thickness tolerance. Minimum - occurs when top flange contacts bottom reinforcing steel. Maximum-top flange thickness plus 45 mm. No increase in concrete and structural steel quantities will be made to maintain tolerances.

Tolerances shown are applicable only when removable deck forming is used. See Std. Dwg. No. 36515 for tolerances when permanent steel deck forms are used. Payment for concrete shall be based on removable deck forming.

ADJUSTMENT FOR SLAB THICKNESS TOLERANCE WHEN REMOVABLE DECK FORMING IS USED

(No Scale)

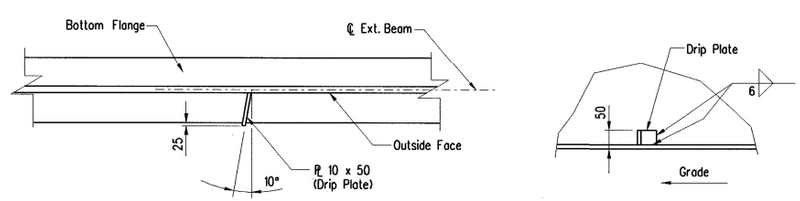

PLAN

ELEVATION

BOTTOM FLANGE DRIP PLATE

(No Scale)

Note:
Bottom flange drip plate to be welded to outside face of exterior beams only. Locate drip plate 900 mm from ℄ Bearing on high side of each bent.

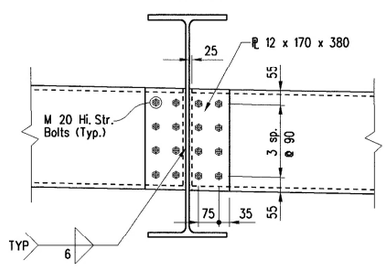

DIAPHRAGM CONNECTION AT INTERIOR BEAMS

(No Scale)

All dimensions are in millimeters unless otherwise noted.

STATE OF ARKANSAS REGISTERED PROFESSIONAL ENGINEER No. 8940 MARK ASHER 6/22/01

BRIDGE ENGINEER

SHEET 1 OF 6
DETAILS OF 54m CONT. COMP. W-BM UNIT
RAMP N-W BRIDGE OVER LINES FERRY ROAD
MILLER COUNTY
US71
ARKANSAS STATE HIGHWAY COMMISSION
LITTLE ROCK, ARKANSAS

DRAWN BY: WEG DATE: 12/29/00
CHECKED BY: MAA DATE: 12/29/00
DESIGNED BY: RLW DATE: 9/16/99
BRIDGE NO. 06861
SCALE: 1:20 METRIC
DRAWING NO. 42682

Carter-Burgess

DGN=d:\job\us71\project5\drawing\bftsd01.dgn - ON=1-63
PRF=F:\PP\7558W-M\bftsd01.prf - ROT=90.000000 - SCALE=0.020000
PLOTTED Wed Jun 20 15:55:53 2001
TBL=F:\PLT-TBL\US7BRDG.TBL

DATE REVISED	DATE FILMED	DATE REVISED	DATE FILMED	FED.ROAD DIST.NO.	STATE	FED. AID PROJ. NO.	SHEET NO.	TOTAL SHEETS
				6	ARK.			
				JOB NO.		030195	107	142

(1) 06861 - SPAN DETAILS - 42683

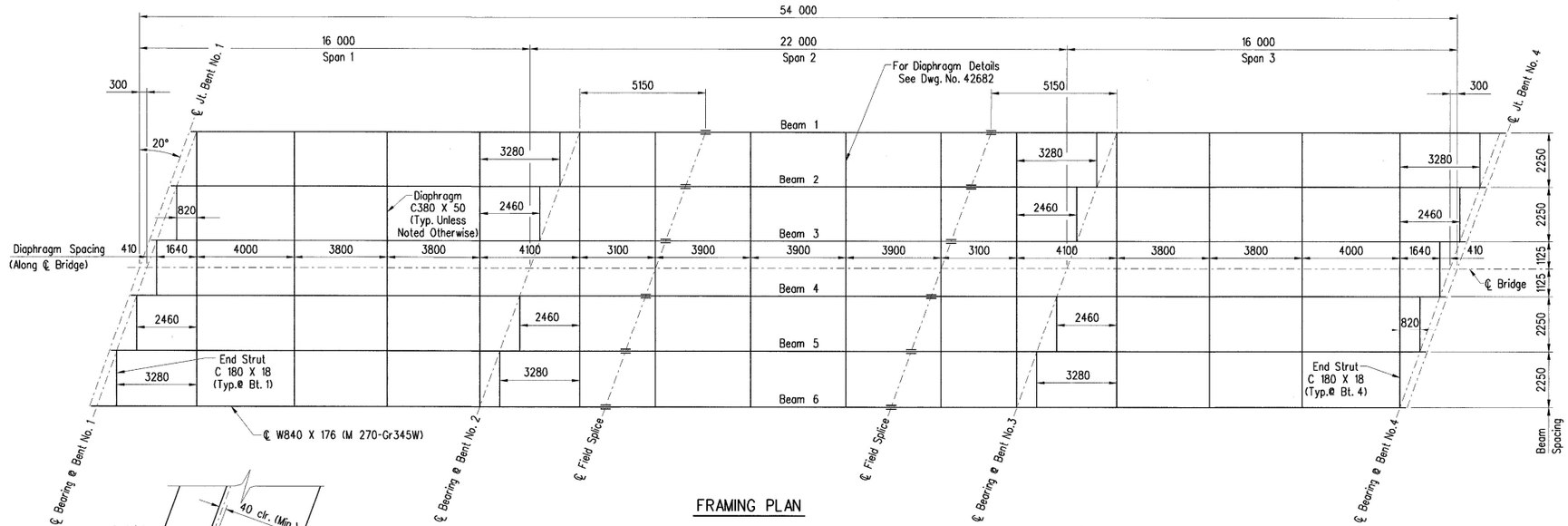

FRAMING PLAN

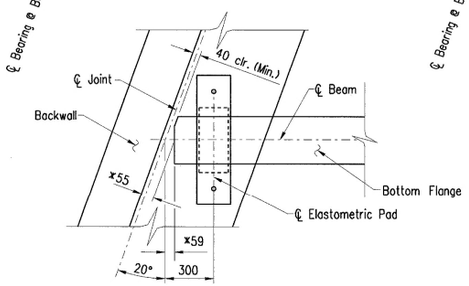

PLAN OF BEARING AT END BENT

(No Scale)
x @ 16°C

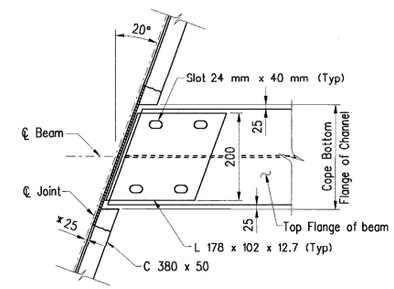

TYPICAL CHANNEL CONNECTION

(No Scale)
x @ 16°C

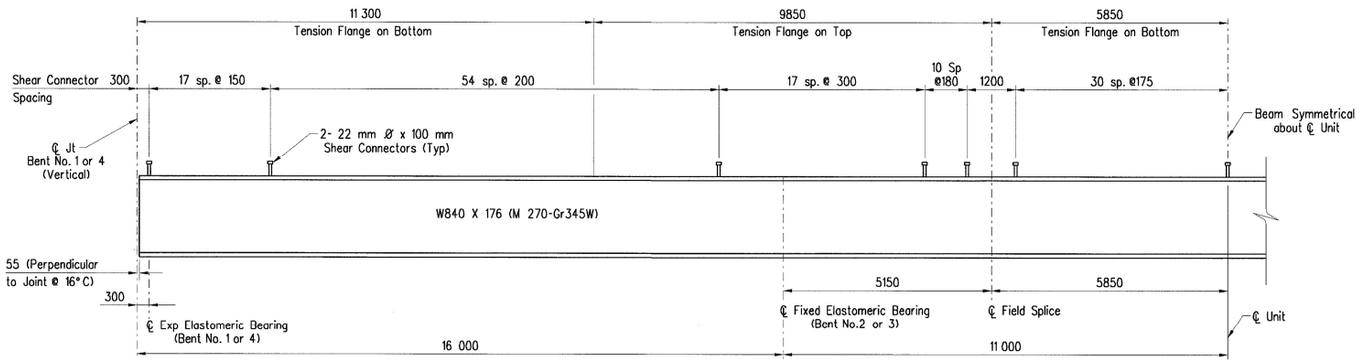

TYPICAL BEAM ELEVATION

(No Scale)

All dimensions are in millimeters unless otherwise noted.

STATE OF ARKANSAS
REGISTERED PROFESSIONAL ENGINEER
No. 8940
MARK ASHER
6/22/01

BRIDGE ENGINEER

SHEET 2 OF 6
DETAILS OF 54m CONT. COMP. W-BM UNIT
RAMP N-W BRIDGE OVER LINES FERRY ROAD
MILLER COUNTY
US71
ARKANSAS STATE HIGHWAY COMMISSION
LITTLE ROCK, ARKANSAS

DRAWN BY: WEG DATE: 12/29/00
CHECKED BY: MAA DATE: 12/29/00
DESIGNED BY: RLW DATE: 9/16/99
BRIDGE NO. 06861

SCALE: 1:100 METRIC

DRAWING NO. 42683

Carter-Burgess

DGN=d:\job\us71\project5\drawing\bifgdd01.dgn - ON=1-63
PRF=F:\PP\7558W-W\bifgdd01.prf - ROT=90.000000 - SCALE=0.100000

PLOTTED Wed Jun 20 15:54:02 2001
TBL=F:\PLT-TBL\US71.TBL

DATE REVISED	DATE FILMED	DATE REVISED	DATE FILMED	FED.ROAD DIST.NO.	STATE	FED. AID PROJ. NO.	SHEET NO.	TOTAL SHEETS
				6	ARK.			
				JOB NO.		030195	112	142

(1) 06861 - BEARING DETAILS - 42688

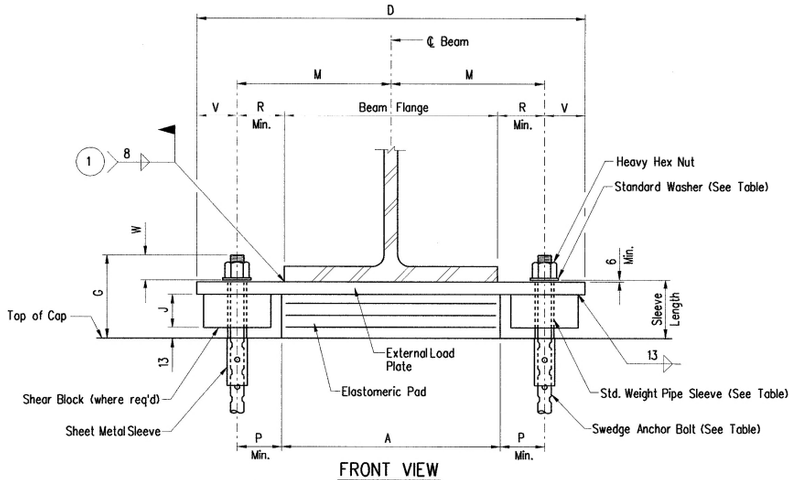

FRONT VIEW

(1) Care shall be taken to ensure that the external load plate is in full contact with the beam flange before welding begins.

Note: Shear Blocks are required at Bent No. 2 & 3.

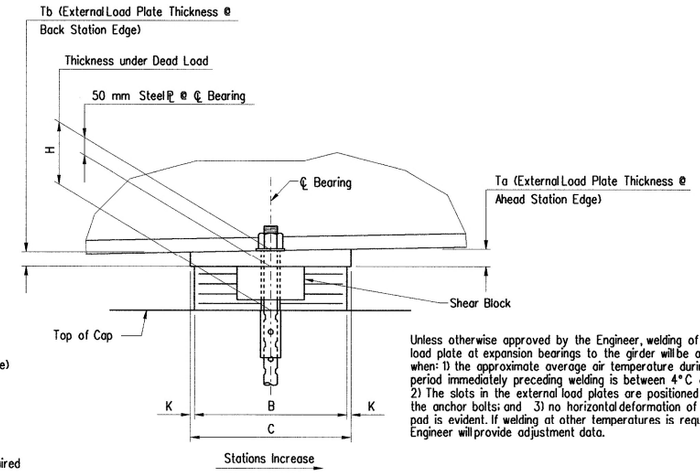

SIDE VIEW

Unless otherwise approved by the Engineer, welding of the external load plate at expansion bearings to the girder will be allowed only when: 1) the approximate average air temperature during the 24 hour period immediately preceding welding is between 4°C and 16°C; and 2) The slots in the external load plates are positioned to center on the anchor bolts; and 3) no horizontal deformation of the elastomeric pad is evident. If welding at other temperatures is required, the Engineer will provide adjustment data.

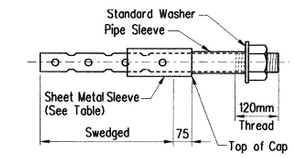

ANCHOR BOLT DETAIL

NOTE:
Anchor Bolts may be cast in place or drilled and grouted into place. If Anchor Bolts are to be cast in place, the Galvanized Sheet Metal Sleeves will not be required.

If Anchor Bolts are to be drilled and grouted in place, the Galvanized Sheet Metal Sleeves shall be cast in place as shown. Sleeves shall be dry packed with styrofoam, urethane foam or approved equal prior to pouring of concrete. After pouring of the cap and prior to erection of Structural Steel, the dry pack shall be removed and holes for the anchor bolts shall be accurately drilled into the masonry. Bolts placed in drilled holes shall be accurately set and fixed using a QPL approved epoxy or non-shrink grout that completely fills the holes. Galvanized Sheet Metal Sleeves will not be paid for directly, but will be considered subsidiary to the item "Structural Steel in Beam Spans, (M 270, Gr. 345W)

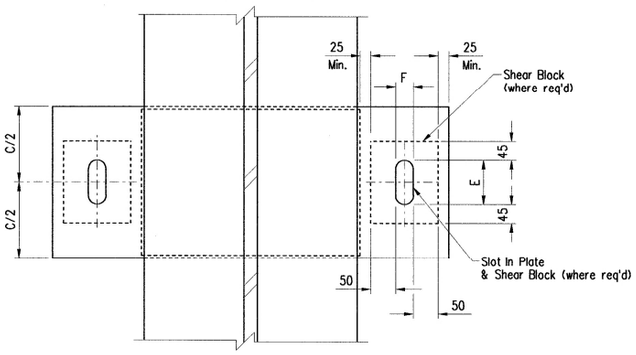

PLAN VIEW

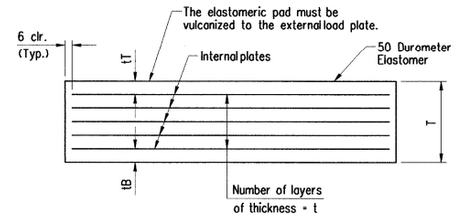

t = thickness of elastomer between internal plates
tT = thickness of elastomer cover on top of pad
tB = thickness of elastomer cover on bottom of pad
N = number of elastomer layers of thickness t

ELASTOMERIC PAD

GENERAL NOTES

All dimensions are in millimeters unless noted otherwise.

Elastomeric Bearings shall conform to Special Provision Job 030195 "Elastomeric Bearings" and Section 808 of the Standard Specifications and shall be paid for at the unit price bid for "Elastomeric Bearings."

External load plates and shear blocks shall conform to AASHTO M 270, Grade 345W and will not be paid for seperately, but will be included in the unit price bid for "Elastomeric Bearings". Pipe sleeves shall be ASTM A53, Grade B, and shall be galvanized to conform to AASHTO M 232, Class C or AASHTO M 298, Class 50.

External load plates with shear blocks shall be completely fabricated (including bevel, bolt holes and all shop welding) and shall be cleaned before vulcanized to the elastomeric bearing. The surface in contact with the elastomeric bearing shall be cleaned in accordance with Special Provision Job 030195 "Elastomeric Bearings". Other surfaces shall be blast cleaned in accordance with subsection 807.84(b) for painted steel shall and 807.84(e) for unpainted Grade 345W steel.

Anchor Bolts, Washers and Nuts shall conform to subsection 807.07 of the Standard Specifications. The anchor bolt grade of steel shall be as specified in the "Table of Fabricators Variables". Indentations shall be circular with rounded bottoms and staggered as shown in the details.

Pipe Sleeves, Anchor Bolts. Washers and Nuts shall be paid for at the unit price bid for "Structural Steel in Beam Spans (M270, Gr. 345W)".

Install Pipe Sleeves, Washers, and Nuts prior to erection of Beams.

Tabular Data By : WEG Date: 12/29/00
Checked By : MAA Date: 12/29/00
Designed By : RLW Date: 9/16/99

TABLE OF VARIABLES

BRIDGE NO.	LOCATION		BEARING TYPE	NO. of BRGS. EACH BENT	*MAXIMUM LOAD (kN)	H	A	B	T	tT	tB	t	N	NO. & THICKNESS OF INTERNAL Pls	C	D	M	Tb	Ta	E	J	K	ANCHOR BOLT SIZE	PIPE SLEEVE LENGTH	SHEET METAL SLEEVE LENGTH	G
	UNIT	BENT NO.																								
06861	54m	Bent 1	Exp.	6	293	228	400	180	180	6	6	10	14	15 @ 14ga.	260	860	315	49.4	50.6	116	---	40	50.8 mm Ø x 880	240	180	320
06861	54m	Bent 2	Fix.	6	621	179	350	210	133	6	6	10	10	11 @ 14ga.	240	770	280	49.8	50.2	60	116	15	38.1 mm Ø x 690	190	180	260
06861	54m	Bent 3	Fix.	6	621	179	350	210	133	6	6	10	10	11 @ 14ga.	240	770	280	50.3	49.7	60	116	15	38.1 mm Ø x 690	190	180	260
06861	54m	Bent 4	Exp.	6	293	228	400	180	180	6	6	10	14	15 @ 14ga.	260	860	315	50.7	49.3	116	---	40	50.8 mm Ø x 880	240	180	320

* Maximum Load = Service Load

TABLE OF ANCHOR BOLT VARIABLES

ANCHOR BOLT DIAMETER	PIPE SLEEVE NOMINAL DIAMETER	SHEET METAL SLEEVE DIA.	STANDARD WASHER SIZE (O.D.)	MINIMUM EMBEDMENT LENGTH	SLOT WIDTH "F"	P Min.	R Min.	V	W
31.7	31.7	76	63.5	310	50	100	60	100	60
38.1	38.1	76	76.2	380	60	105	65	105	65
44.4	50.8	100	85.7	460	70	110	70	110	70
50.8	63.5	100	95.2	510	80	115	75	115	80
57.1	63.5	100	101.6	590	80	115	75	115	85
63.5	76.2	100	114.3	640	95	125	85	125	90

STATE OF ARKANSAS
REGISTERED PROFESSIONAL ENGINEER
No. 8940
MARK ASHER 7/12/01

BRIDGE ENGINEER

DETAILS OF ELASTOMERIC FIXED AND EXPANSION BEARINGS
RAMP N-W BRIDGE OVER LINES FERRY ROAD
MILLER COUNTY
US71
ARKANSAS STATE HIGHWAY COMMISSION

LITTLE ROCK, ARKANSAS

DRAWN BY: WEG DATE: 12/29/00
CHECKED BY: MAA DATE: 12/29/00
DESIGNED BY: RLW DATE: 9/16/99
BRIDGE NO. 06861 DRAWING NO. 42688

SCALE: No Scale
METRIC

Carter-Burgess